HWM

STANLAY™

Continuous Level and Overflow Monitoring Sensors for Wastewater, Sewage & Stormwater.

2025 - 26
Book 3 ver.1

Long-Term Intelligent Monitoring City/Town/Industrial Sewage Network

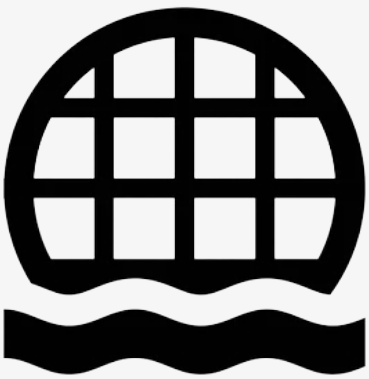

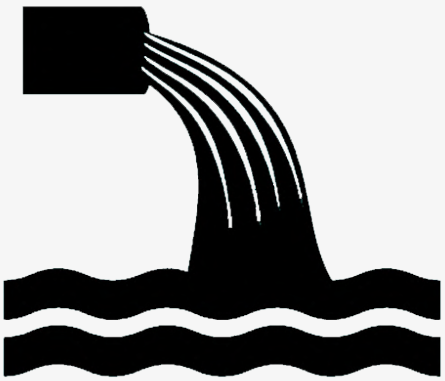

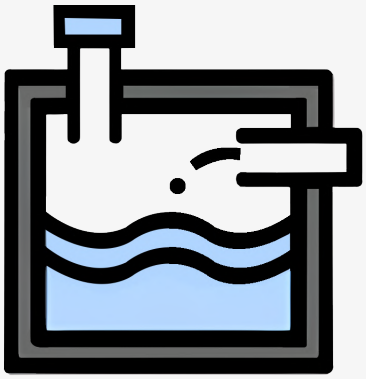

Quality in Waste Water and Sewage Monitoring. Delivered.

INTRODUCTION

Asian Contec Ltd. under Its brand name Stanlay is an engineering distribution company in the field of engineering product solutions for testing and project executing catering to the infrastructure segment including telecom, water, sewer & power utility segment, road construction, railway, building construction , heavy engineering and engineering institutional segment with a customer base spanning India, Bangladesh, Nepal and Sri Lanka. ACL Stanlay is an established market leader in its application segments.

Stanlay supplies some of the most robust equipment's and instrumentation product allowing use by operators at all levels and in any site conditions which are built to last. Stanlay works closely with its premier customer group to provide solutions which directly address project specific application requirements such as:

Underground Utility Locating & Mapping Product Solution:	• Cable Locators to located buried utility assets before you excavate • Passive Electronic & RFID Makers • Non Metallic & Metallic Utility Locating GPR
Telecom Tester	• OTDR / Splicing Machines • 1G & 10G Network Analysers • Optical power meter • Cable fault locators for telecom cables.
Cable Installation	• Duct Rodders for OFC installation • Traceable duct rodders for buried duct tracing • Fish Tape | Push Pull Rods | Mini Rodders for electrical cable installation
Power Cable Fault Locating Equipment	• Portable & Van Mounted Power Cable Fault Locators for LV & HV Cables
Geophysical Investigation	• Geophysical GPR's for subsurface analysis for geophysical / geological investigation. • Interferometry radars for structural monitoring, remote terrain slope monitoring, structural health monitoring • Concrete deck scanning GPR for inspection of corrosion and delamination in concrete
Electrical Test & Measurement:	• Multimeters | Clamp Meter | Earth Resistance | Insulation Tester • Power Quality Analyzer
Pavement - Road / Highway / Runway testing Product:	• Falling Weight Deflectometer for pavement deflection testing • Skid resistance tester • Laser Profilometer for road data collection including asphalt rut, IRI, RN, Texture measurement • Light weight deflectometer for testing compaction quality of unbound & bound subgrade and soil layers. • Asphalt content tester
Non-destructive Test Instrumentation For Concrete:	• UPV and Digital concrete test hammers • Concrete resistivity testing and moisture measurement • Ferromagnetic and GPR based rebar locators
Material Inspection:	• Material thickness gauges & A/B Scope | Flaw Defectors | Bolt tension Monitor • Coating thickness gauges • Video Boroscope
Water & Waste Water:	• Pipe inspection cameras • Robotic pipe crawler camera • Water leak detectors • Water network loggers, sensors and pressure controlerr
Video Borescope	• Articulated & Economy borescope

Our corporate headquarters at New Delhi and manufacturing location at Faridabad, Haryana serve as the nerve centres, supported by our regional presence. Our application trained sales and service personnel provide customer support through the office apart from sales representatives at locations throughout India. Product are distributed through a centralized distribution system.

Product receive direct warranty from ACL with supply and warranty information stored in our central database software to ensure peace of mind for the customer.

CONTENTS

Page #

SEWAGE LEVEL & OVERFLOW MONITORING IN MANHOLES

RadarSens | Sewer and Stormwater Monitoring | 3m Range	1-2
RadarSens LR | Deep Sewer Level Monitoring | 14m Range	3-4
SpillSens | Float Sensor - Monitor Rising Levels	5-6

Datalogger for Remote monitoring of Water, Sewage & Stormwater Network.

Intelligens WW | ATEX Certified Data Logger	7-8

Queens Award for Innovation 2017 | Kings Award for Innovations 2023

The Range of Sensors and Data Loggers for Wastewater and Sewage Monitoring offered is in association with HWM Water, the worlds leading manufacturer of monitoring and telemetry equipment for water, wastewater and gas networks. HWM Water is a part of the Halma PLC group, a conglomerate with over £1.5B in revenues & one of Great Britain's most admired companies.

With its primary focus for over 40 years on clean water and network distribution, HWM Waste Water Sensors and data loggers are being used worldwide for monitoring assets, delivering data and bringing control in management of water utility networks, and have contributed to significant reduction in NRW losses and increase in revenues.

ACL Stanlay is responsible for sales, value add engineering , tech support and after sales, for ensuring efficient deployment and utilisation of HWM equipment for water network customers in India.

RadarSens | Sewer & Stormwater Level Monitoring

Intrinsically Safe ATEX Zone 0 Certified Remote Monitoring Device for Sewage/Wastewater levels.

RadarSens utilised for monitoring sewage level remotely is ATEX certified (for use in sewage networks which may contain a mixture of flammable gases and vapours) - Simple to install - Once configured with a data logger, Site information is collected and synchronised with the DataGate cloud server platform at the time of installation to allow remote monitoring from office.

The RadarSens is a radar-based monitoring sensor for remote measurement of sewer, wastewater and storm water levels. Installed in a manhole chamber, RadarSens measures the changing depth or level of sewage/wastewater. RadarSens is ATEX Zone 0 certified for use in hazardous & explosive environments which may contain inflammable gases.

RadarSens is usually integrated with a datalogger for remote data transmission of monitored sewage/wastewater levels with alarms based on rising level thresholds. The device also monitors temperature, sensor orientation (pitch & roll) & signal intensity which helps detect blockages and movement.

Multiple RadarSens devices can be set up in a sewage network for monitoring through the Datagate cloud server at central office, based on which zonal or nodal offices can be notified for maintenance & rectification activities of the sewage pipelines and manholes in a water or municipal network.

Key Features and Benefits

- **Radar technology:** Advanced and cost-effective radar sensor delivers precise data for long-term network monitoring
- **Intrinsically safe:** Certified for use in Zone 0 hazardous areas
- **Accurate:** ±0.5% accuracy with a **3m range**

Telemetry for connectivity	Powered by a long-life battery with up to 5 years of operation

- **Dependable:** IP68, Water/dust proof rugged construction no need for external power connections
- **Telemetry:** Compatible with dataloggers for NB-IoT, LTE-M and 2G cellular networks for remote data transmission
- **Bluetooth® connectivity:** Local Bluetooth® configuration allows for definitive in-chamber signal strength testing and sensor reflection tracing using the IDT app (Android and iOS)
- **Sensor health check:** Remote monitoring of sensor position (pitch & roll), data quality and chamber temperature to confirm if unexpected changes in level trends are related to third-party activity
- **Secure Installation:** A range of easy-fit stainless steel wall brackets and non-drill installation brace bars are available
- **Installation Mobile App:** Supporting quick and accurate mass deployment

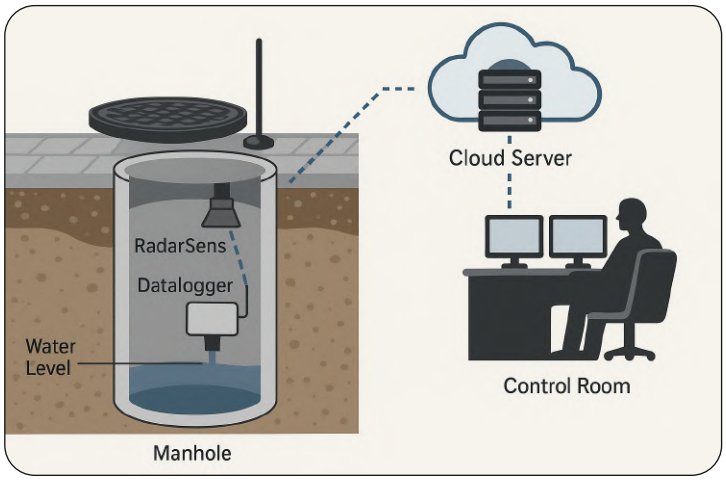

RadarSens | Sewer & Stormwater Level Monitoring

Technical Specifications:

Feature	Specification
Rating	UKEx/ATEX/IEC Ex certified to Zone 0
Range	3m
Operating Temp.	-20 to 60°C
Accuracy	±0.5%
Antenna (Logger)	Bulgin
Battery (Logger)	Typical 5+ year battery life
Alarms	Multiple threshold, profile & pitch & roll with additional diagnostics
Dimensions (HxWxD)	40x110x111mm
Deployment	Drop-in alignment tool (supplied separately)
Ingress Protection	IP68 rated

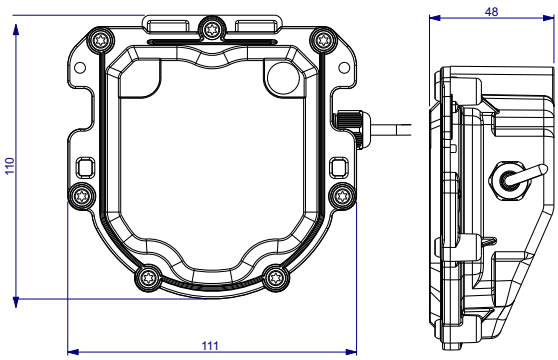

Installation Visuals:

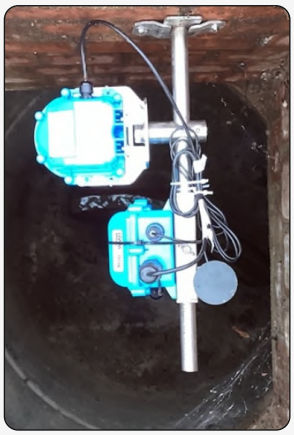

Complimentory Devices:

1 Intelligens WW

ATEX Certified Data Logger

Intelligens WW is a data logger engineered for use in waste water applications. Intrinsically safe ATEX 0 and the Intelligens WW is typically used with RadarSens for long term monitoring of sewage level & overflows, installed inside a sewer manhole.

2 HWM Deployment App

Logger Installation Support

The HWM Deployment App is an installation tool that supports the quick and effective deployment of HWM manufactured data loggers. As well as recording installation details, the Deployment App is used to test signal strength during installation.

3 DataGate/DataView

Secure Data Platforms

Our DataGate and DataView platforms provide access to the devices and the data that they gather. DataGate holds a database of all installations and site details, while DataView provides the collected level data as well as the ability to set and view alarms. The sewage network can be accordingly monitored from central office on a PC.

RadarSens LR | Deep Sewer Level Monitoring

RadarSens LR is an intrinsically **Long range sewer level monitoring system** (SLM) that combines **radar sensing technology** for effective monitoring in sewage channels upto **a depth 14 meters**.

RadarSens LR is a radar-based monitoring sensor for **remote measurement of sewer, wastewater and storm water levels.** Installed in a manhole chamber, Radarsens LR measures the challenging **depth or level of sewage/wastewater.** RadarSens LR is **ATEX Zone 1** certified for use in **hazardous & explosive environments** which may contain inflammable gases.

RadarSens LR is usually integrated with a datalogger for **remote data transmission** of monitored sewage/wastewater levels with **alarms based on rising level thresholds.** The device also monitors temperature, sensor orientation (pitch & roll) & signal intensity which helps **detect blockages and movement.**

RadarSens LR data is monitored through the **Datagate cloud server** at central office, based on which zonal or nodal offices can be notified for maintenance & rectification activities of the **sewage pipelines** and **manholes** in a water or municipal network.

Powered by a long-life battery with up to 5 years of operation	Telemetry for connectivity

Key Features and Benefits

- Use in Deep Sewage Pipes/Manholes:14m range
- Advanced and cost-effective radar sensor delivers precise data for **long-term network monitoring**
- Intrinsically safe and certified for use in **Zone 1 hazardous areas**
- **Accuracy ≤ 2mm accuracy over a 14m range**
- Local Bluetooth® configuration allows for definitive in-chamber signal strength testing and sensor reflection tracing using the IDT app (Android and iOS)
- **Remote monitoring** of data quality and chamber temperature to confirm if unexpected changes in level trends are related to **third-party activity**
- A range of easy-fit and robust stainless steel wall brackets and non-drill installation brace bars are available
- Typical **5+ year battery life**
- **IP68**, rugged construction and long-life battery
- Compatibility with Installation App to support quick and accurate mass deployment
- Drop-in laser alignment tool to assist installation, ensuring the sensor is positioned correctly (supplied separately)

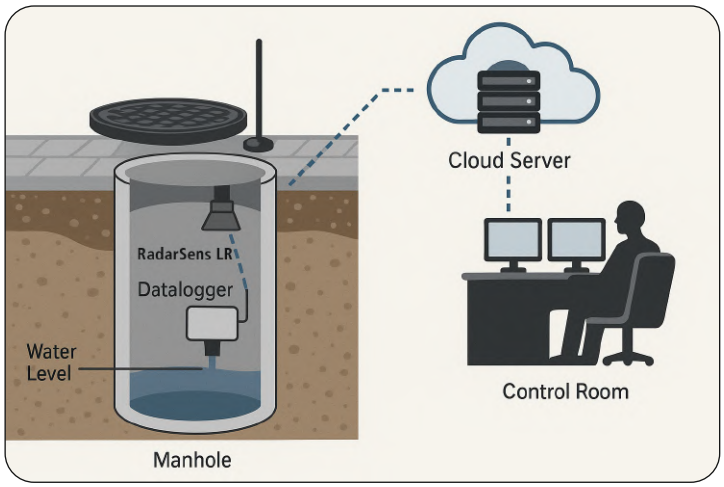

RadarSens LR | Deep Sewer Level Monitoring

Technical Specifications:

Feature	Specification
Rating	UKEx/ATEX/IEC Ex certified to Zone 1
Range	up to 14m
Operating Temp.	-20 to 60°C
Accuracy	≤ 2mm
Antenna (Logger)	Bulgin
Battery (Logger)	Typical 5+ year battery life
Alarms	Multiple threshold, profile with additional diagnostics
Dimensions (HxWxD)	76x37x37mm
Deployment	Drop-in alignment tool (supplied separately)
Ingress Protection	IP68 rated

RadarSens LR is ATEX 1 certified for use in sewers with flammable gases or vapours typical of sewage networks.

Installation Visuals:

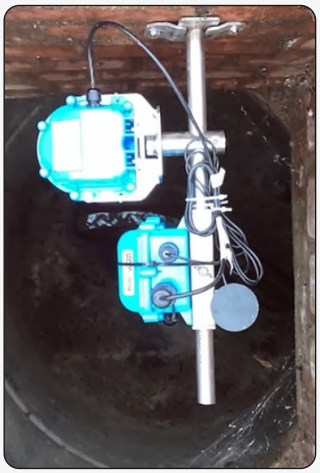

Complimentory Devices:

1 Intelligens WW

ATEX Certified Data Logger

Intelligens WW is a truly flexible data logger specifically engineered for the rigours of waste water applications. Intrinsically safe and built for compatibility, the versatile Intelligens logger can be tailored to meet a variety of specific user needs. Built in Telemetry (2G/3G/4G) transmits data to central office through cloud server.

2 HWM Deployment App

Logger Installation Support

The HWM Deployment App is an installation tool that supports the quick and effective deployment of HWM manufactured data loggers. As well as recording installation details, the Deployment App is used to test signal strength during installation.

3 DataGate/DataView

Secure Data Platforms

Our DataGate and DataView platforms provide access to the devices and the data that they gather. DataGate holds a database of all installations and site details, while DataView provides the collected level data as well as the ability to set and view alarms.

SpillSens | ATEX Certified Digital Float Sensor | Monitor Sewage Rising Levels

SpillSens is a Low-Cost, Multi-alarm Digital Float Sensor designed to act as an Early Warning System for Blockages and Sewer overflows for detecting rising Sewage/Wastewater exceeding critical levels in smaller/shallower Sewage lines chambers.

ATEX-approved and built to withstand harsh sewer environments, SpillSens uses digital positioning technology to **monitor rising levels in the waste water network**. When installed at a specific height in the chamber, SpillSens uses **digital positioning technology** to determine whether it is hanging vertically in mid-air or floating in wastewater.

As network levels alter, the tilt angle of the sensor is continuously monitored and if the tilt angle enters a **pre-set range , alert messages** are transmitted to the SpillGuard cloud based web portal.

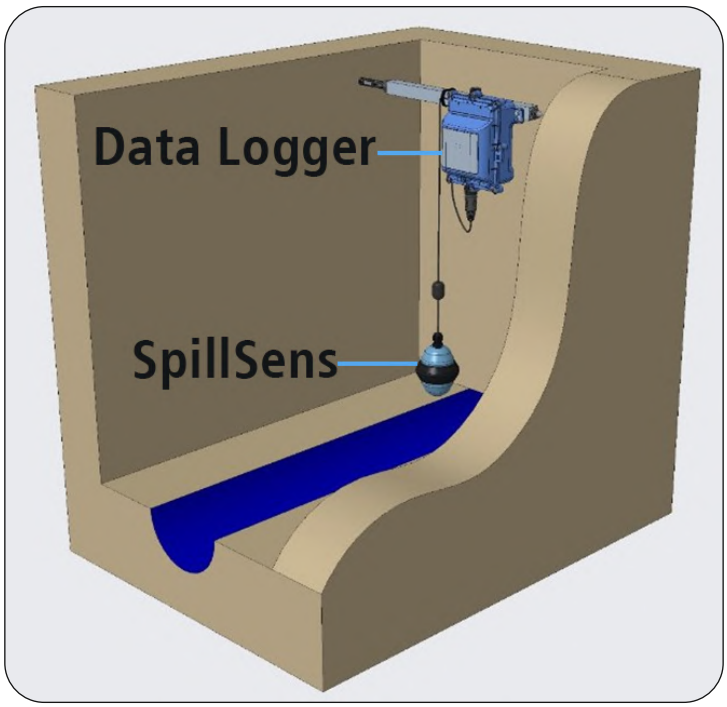

Key Features and Benefits

- **Three levels of alert:** green, amber and red; based on the angle of the sensor:
  - Green - vertical orientation, network operating as expected
  - Amber - movement in orientation, high alert triggered
  - Red - sensor movement >110°, high/high alert triggered
- **Intrinsically safe:** Certified for use in Zone 0 hazardous areas.
- **No moving components:** Designed to have no moving parts, unlike traditional steel ball and micro-switch state sensors
- **Robust design:** Durable materials not adversely affected by long-term exposure to waste water environments
- **Cable length options:** Available with 0.5m, 1m, 2m or 3m cable lengths
- **Compatibility:** Works in conjunction with Intelligens WW and various other HWM data loggers
- **Online data viewing:** Via SpillGuard; providing Map View and a variety of valuable features

Applications

Connected to an advanced data logger with integral telemetry, alert messages are transmitted to a dedicated cloud server user portal.

SpillSens is a simple to install, robust and cost-effective solution for long-term level monitoring in waste water/sewage networks.

SpillSens can be connected to, and is powered by, a variety of HWM data loggers. For an intrinsically safe, robust and cost-effective solution we recommend **Intelligens WW**.

The datalogger transmits data through an integral modem with advanced cellular tech built in.

SpillSens | ATEX Certified Digital Float Sensor | Monitor Sewage Rising Levels

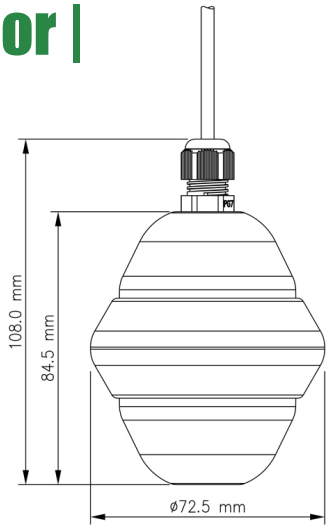

Technical Specifications:

Feature	Specification
Operating Temp.	-20 to 60°C
Dimensions (HxD)	108mmx72.5 mm
Weight	130g (without cable)
Battery	Powered by connected data logger
Cables	0.5m, 1m, 2m or 3m lengths available

Complimentory Devices:

1 Intelligens WW

ATEX Certified Data Logger

Intelligens WW is a truly flexible data logger specifically engineered for the rigours of waste water applications. Intrinsically safe and built for compatibility, the versatile Intelligens logger can be tailored to meet a variety of specific user needs.

2 SpillGuard

Online Data Viewing Portal

SpillGuard is the dedicated online portal for the monitoring and fleet management of HWM's unique multi-level alert system.

Using Google Maps, SpillGuard provides a detailed map interface which colour codes the status of each individual installation. The three alert levels (green, amber and red) can be supplemented with user-assigned statuses, such as "site under investigation" or "alert cleared".

SpillGuard can display general site statistics and trends, as well as specific site details. Individual users and reports are managed using an advanced platform which includes the option to forward alarm messages via e-mail or SMS.

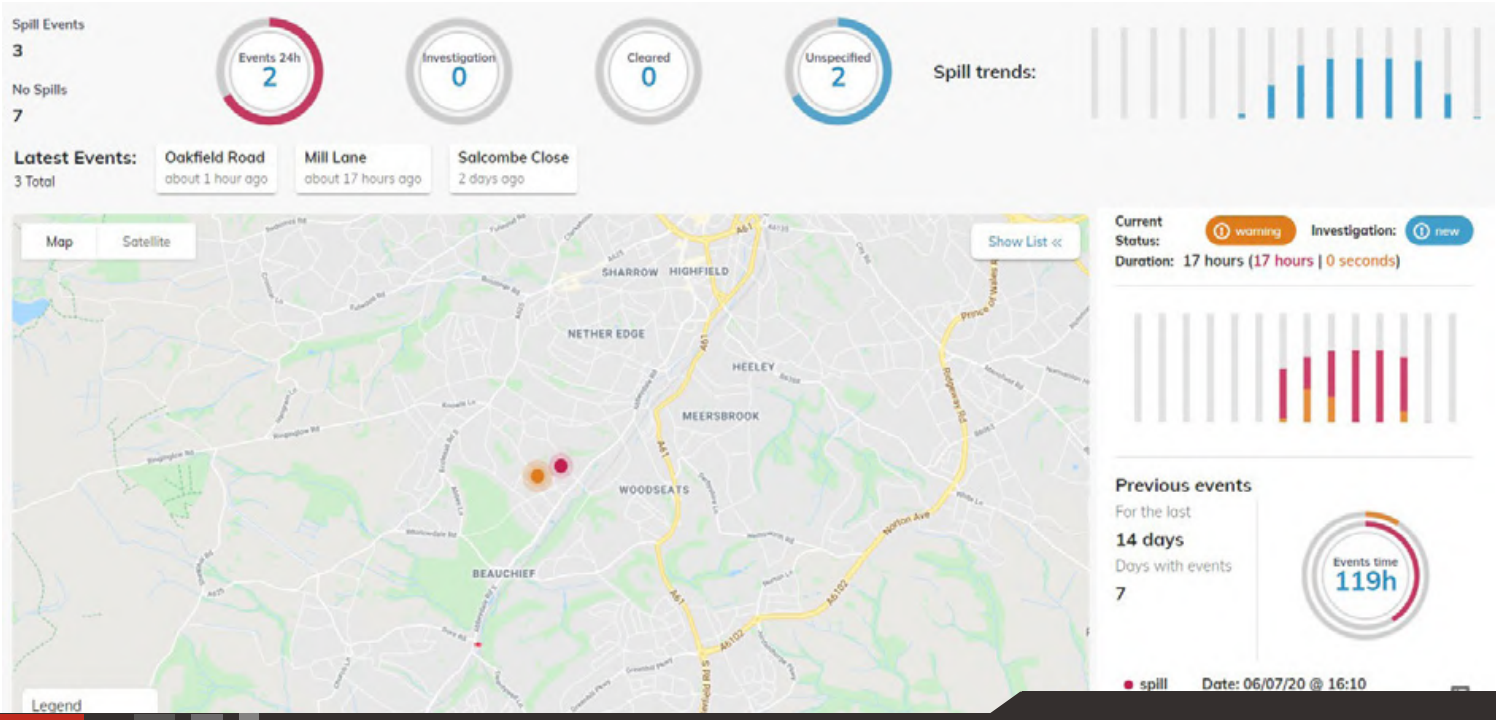

Intelligens WW | ATEX Certified Data Logger

Intelligens WW is a data logger specifically for waste water applications, for use in hazardous environments such as Sewer overflow monitoring.

Intelligens WW is intrinsically safe for use in explosive environments, (ATEX zone 0) is an ideal logging solution for combined sewer overflows, general sewer monitoring, storm drains, storage tanks and flood warning systems.

Designed for long term deployment, with a 5 year battery life. Data is transmitted via its built in 4G/LTE cellular capability.

Intelligens WW is available with support for WITS 1.3.

Intelligens WW is a ATEX Certified datalogger that can be used to log data from a variety of sensors such as RadarSens Sewage level sensor and other pressure or level sensors.

Key Features and Benefits

- **Certification:** Certified for use in Zone 0 hazardous areas
- **Telemetry:** NB-IoT LTE-based cellular communication standard with fallback 2G capability
- **Two-way communication:** Unit can be remotely programmed; suitable for 'fit and forget' applications
- **Flexible sensor integration:** Intelligens is compatible with a wide variety of sensors and inputs
- **Online data delivery and viewing:** Compatible with DataGate and HWM Online
- **Intelligent:** Unit includes advanced data logging and alarm regimes
- **Long-term monitoring:** Typical 5+ year battery life
- **Fully waterproof:** Unit is rated IP68, making it waterproof when submerged
- **Easy maintenance:** User replaceable SIM and battery, along with notifications of system health
- **Anti-corrosion:** Plastic connectors ensure unit is not susceptible to corrosion
- **Upgradable:** Unit can be configured, and its firmware upgraded remotely
- **WITS 1.3 protocol:** Support for WITS 1.3 delivering direct integration with WITS SCADA systems

Applications

Intelligens WW is truly flexible, making it the ideal data logger for hazardous utility network applications. Compatibility with ESI and ESIB accessories means that a variety of different sensors can be deployed.

Intelligens transmits data through an integral modem with **2G, 3G, 4G, LTE-M (Cat-1) and other NB-IoT** options available.

Intrinsically safe for use in **explosive environments** (ATEX/IEC Ex Zone 0), Intelligens is designed to be both insusceptible to **corrosion and fully waterproof.**

Remote communications and a long-life battery make Intelligens perfectly suited to 'fit and forget' applications in remote or hard to access locations.

Intelligens WW | ATEX Certified Data Logger

Technical Specifications:

Logger Features	
Rating	ATEX/IEC certified to Zone 0
Memory	Up to 2 million readings
Firmware	Safe local and remote upgradable firmware
Sampling Rate	Variable sample rate 1s to 24hrs, accelerating on alarm
Alarms Logger ID	Multiple Lower/Upper Limit, Min Flow, Rate of Change, Channel Difference, In/Out of Band alarm types. Accelerated dial-in on alarm.
Secondary Channel	Log fast data, average minimum, average maximum or event duration
Dimensions (HxWxD)	200x97x88 mm
Weight	1kg
Operating Temp.	-20 to +60°C
Ingress Protection	IP68
Power	User replaceable battery pack operational for 5+ years under standard operating conditions, complete with low battery alarm. External power option available with a sustainable ATEX certified power source
Communication	
Internal Cellular Modem	Cellular modem supporting 2G/3G/4G/NBIoT/LTE-M (Cat-1) with SMS backup where available
Accelerated Dial-in	Dial-in rate is increased if alarm situation is triggered. Logger can accelerate dial-in at alarm level for multiple applications - including SonicSens 3, Flow, Pressure and other alarmed sensors
Sensor Input	
mV	Example: pressure sensor for level measurement
Serial Digital Interface	Modbus SDI12 and Rs232
4-20 mA	Example: mems tils transmitter, radar sensor
Digital	Example: float switch, rain gauge
Level Sensor	Ultrasonic level detection using HWM SonicSens 3
Control Output ports	
Digital	2 independent configurable outputs

STANLAY™

Professional Grade Products

Best In Class Warranty Programmes

Product & Service Training

Regd. Office:
Asian Contec Ltd.
Asian Centre, B-28, Okhla Industrial Area, Phase-1,
New Delhi -110020, India.

Contact Nos.:
Tel : +91-11-41860000 (100 Lines),
Direct Sales Helpline : +91-11-41406926
Web : www.stanlay.in www.stanlay.com
email: sales@stanlay.com

Regional Offices :
• Faridabad • Lucknow • Mumbai • Vadodara • Bengaluru
• Hyderabad • Kolkata • Bhubaneswar • Patna • Guwahati
• Kerala

Sales Channel Locations: • Chennai

Catalogue Version : Ref: ST/Book2/HWM/25-26

www.stanlay.in

Quality Management System

ISO 9001: 2015

1-QSC202101102

BQC ASSESSMENT

IAS